Smart Irrigation System Using ESP32

Computer Microprocessor

EEC 214

NAME	ID	Group
Mohamed Hazem Gouda	20243160	4
Moataz Mohamed Rajab	20243147	4
Mohanad Mohamed Rajab	20243148	4
SaadEldin Abdallah Saad	20243149	4

Submitted To:

DR: Mohamed Torad

1. Abstract

This comprehensive technical report delineates the intricate engineering process involved in designing and implementing an advanced, automated irrigation system utilizing the **ESP32-** microcontroller as the central computational node. The project integrates multi-modal sensing specifically high-resolution soil hygrometry and atmospheric thermohydrometry to establish a sophisticated high-precision closed-loop feedback mechanism [4]. By leveraging the dual-core processing power of the ESP32 and the robust current-driving capabilities of the **L298 H-Bridge**, the system provides a fail-safe solution for autonomous water resource management. This documentation covers the theoretical foundations of soil-water relationships, the hardware interfacing protocols, and the algorithmic logic required to transition from traditional, wasteful manual farming to data-driven precision agriculture [6].

2. Introduction

The intersection of the Internet of Things (IoT) and modern agriculture, often categorized as **Agriculture 4.0**, is essential for meeting the food security demands of the 21st century. Traditional irrigation techniques often suffer from significant localized inefficiencies, with empirical studies indicating that up to 60% of irrigation water is lost to evaporation, surface runoff, or deep percolation due to poor timing and lack of feedback [3].

This project addresses these systemic inefficiencies by deploying an intelligent embedded node capable of autonomous decision-making at the edge. Using the **ESP32**, we can process complex environmental data streams in real-time with negligible latency. The system does not merely follow a static timer; it "senses" the physiological needs of the plant by measuring soil dielectric properties and atmospheric conditions via the **DHT11** sensor [5]. This ensures that irrigation occurs only when the ecological parameters dictate a mathematical necessity, thereby preserving the structural integrity of the soil and the health of the plant's root system [6].

3. Aim of the Project

- **Precision Actuation and Control:** To implement a control system that maintains soil moisture within a specific "Safe Zone," preventing the "Permanent Wilting Point" while avoiding soil hypoxia from over-saturation [6].
- **Advanced Hardware Interfacing:** To master the complex interfacing of high-impedance analog hygrometers and digital bit-stream sensors (DHT11) with a 32-bit MCU architecture [1].
- **Power Stage Isolation:** To design a robust power stage using the **L298 H-Bridge** that can drive high-current inductive motor loads (DC Pumps) without introducing electromagnetic interference into the logic circuitry [2].
- **Scalability and Future-Proofing:** To provide a hardware foundation that is natively compatible with cloud-based monitoring protocols such as MQTT or HTTP, thanks to the ESP32’s integrated Wi-Fi stack.

- **4. Component List (Detailed Hardware Requirements)**
- **ESP32-WROOM (Dual-Core 32-bit MCU):** Operates as the central command unit (The Brain). It is selected for its 240MHz clock speed, 12-bit ADC resolution, and its ability to handle multi-threaded tasks [1].
- **Soil Moisture Sensor (Hygrometer):** Utilizes two conductive probes to measure the resistance of the soil, which is inversely proportional to the water content [4].
- **DHT11 Humidity & Temperature Sensor:** A factory-calibrated digital sensor that provides a 40-bit data packet representing ambient climate tracking with a high degree of stability [5].
- **L298 Dual Full-Bridge Driver:** A heavy-duty IC that acts as the high-current interface. It uses TTL-compatible logic to control the DC pump while providing vital isolation [2].
- **Submersible DC Water Pump:** A 5V-12V actuator designed for physical water delivery. It is treated as an inductive load by the system circuitry.

- **RV1 Potentiometer (10kΩ):** Used in the hardware design for fine-tuning the reference voltages and simulating various soil conditions during the testing phase.
- **Voltage Regulation & Power Management:** To ensure a stable 3.3V for the ESP32 logic and a separate high-voltage rail for the L298 motor driver to prevent brownouts.

5. Software Design

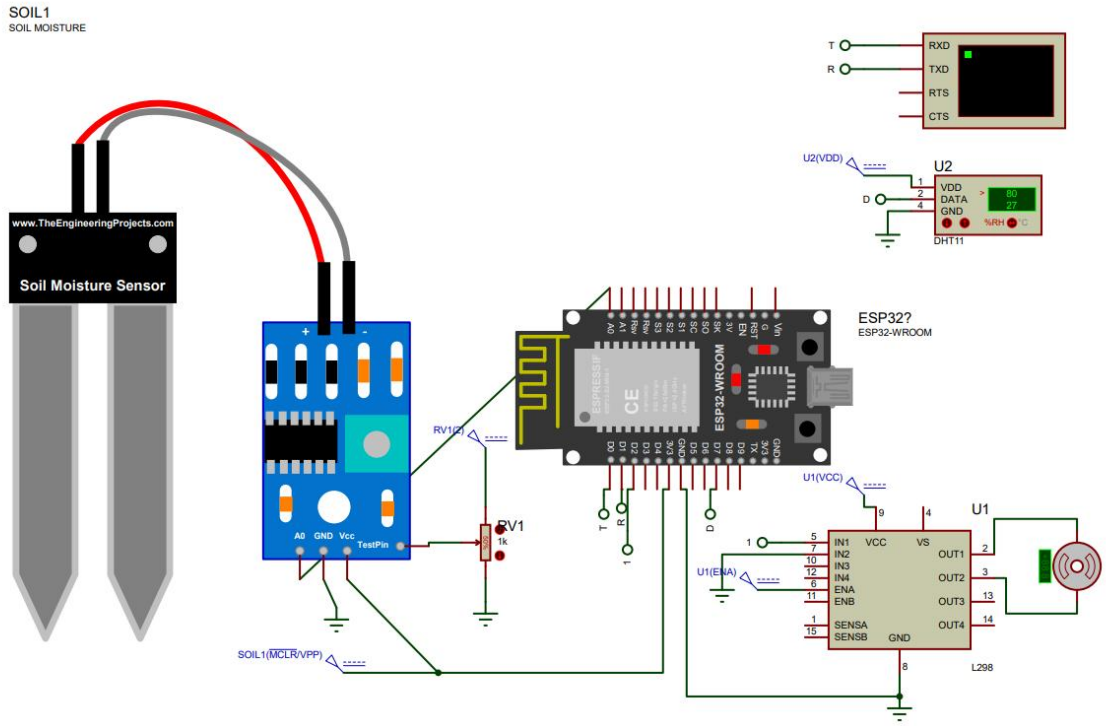

6. Hardware Design

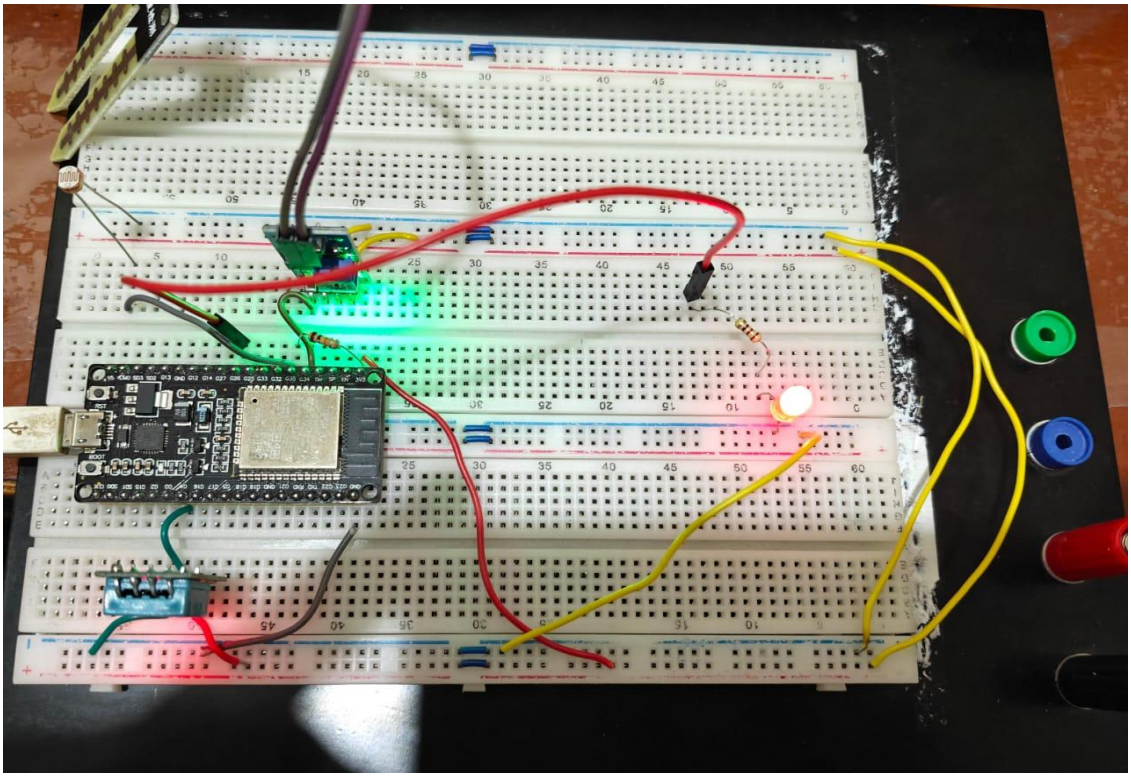

7. The Application

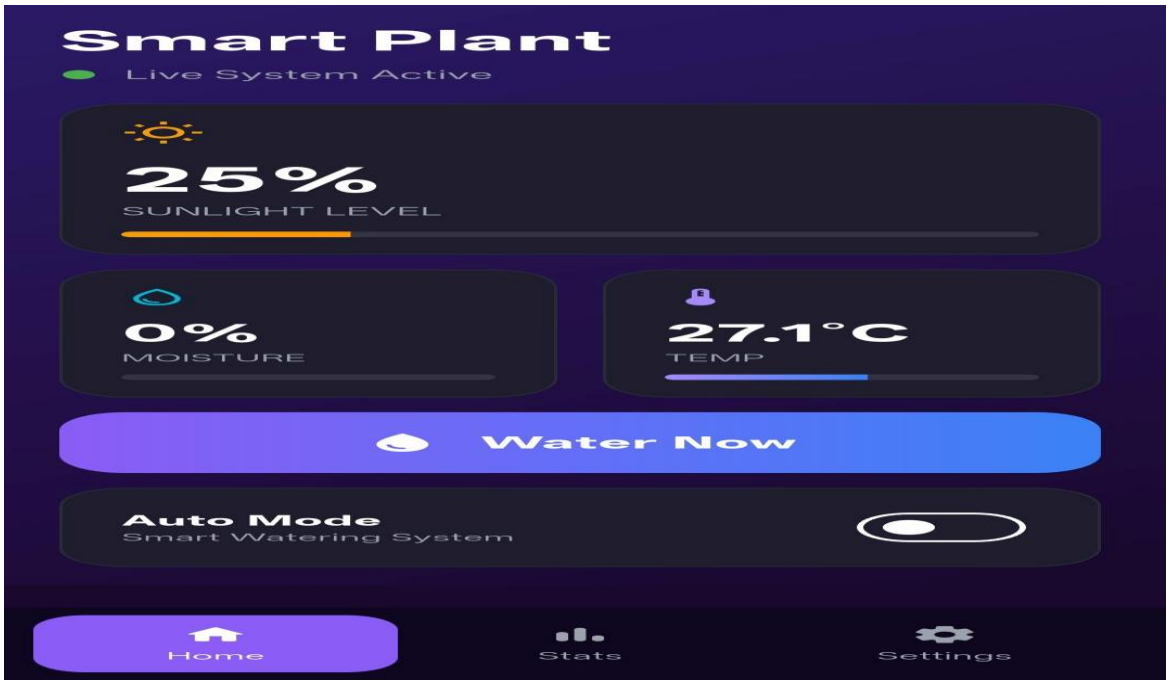

8. Project Program Listing (Source Code)

```
#include <WiFi.h>

#include <Firebase_ESP_Client.h>

#include <DHT.h>


// 1. إعدادات الواي فاي

#define WIFI_SSID "test"

#define WIFI_PASSWORD "123456789"


// 2. إعدادات Firebase (تم التصحيح بناءً على الصورة)

#define DATABASE_URL "https://smartplant-9df1d-default-rtdb.europe-
west1.firebasedatabase.app"

#define DATABASE_SECRET "cITEBGl5Xy1gxZJpfDgYrJzR8ds52j1bdtNhlt5z"


// 3. تعريف الدبابيس

#define DHTPIN 4

#define DHTTYPE DHT11

#define SOIL_PIN 34

#define LDR_PIN 35

#define PUMP_PIN 26


DHT dht(DHTPIN, DHTTYPE);

FirebaseData fbdo;

FirebaseAuth auth;

FirebaseConfig config;
```

```
unsigned long sendDataPrevMillis = 0;
bool autoMode = false;

void setup() {
  Serial.begin(115200);
  pinMode(PUMP_PIN, OUTPUT);
  digitalWrite(PUMP_PIN, LOW);
  dht.begin();

  WiFi.begin(WIFI_SSID, WIFI_PASSWORD);
  Serial.print("Connecting to WiFi");
  while (WiFi.status() != WL_CONNECTED) {
    delay(500);
    Serial.print(".");
  }
  Serial.println("\nWiFi Connected!");

  config.database_url = DATABASE_URL;
  config.signer.tokens.legacy_token = DATABASE_SECRET;
  Firebase.begin(&config, &auth);
  Firebase.reconnectWiFi(true);
Serial.println("System Ready.");
}
void loop() {
```

```
if (WiFi.status() != WL_CONNECTED) return;


// قراءة الحساسات

float h = dht.readHumidity();

float t = dht.readTemperature();

int soilValue = analogRead(SOIL_PIN);

int ldrValue = analogRead(LDR_PIN);

int soilPercent = map(soilValue, 4095, 1500, 0, 100);

soilPercent = constrain(soilPercent, 0, 100);

int lightPercent = map(ldrValue, 0, 4095, 100, 0); // تحويل الإضاءة لنسبة


// 1. جلب الإعدادات من Firebase

// جلب وضع الري التلقائي (auto_irrigation)

if (Firebase.RTDB.getBool(&fbdo, "/controls/auto_irrigation")) {

  autoMode = fbdo.boolData();

}


// 2. منطق التحكم في المضخة

if (autoMode) {

  // وضع تلقائي: تعتمد على الحساس (أقل من 30%)

  if (soilPercent < 30) digitalWrite(PUMP_PIN, HIGH);

  else digitalWrite(PUMP_PIN, LOW);

} else {

  // وضع يدوي: تعتمد على زر الـ Pump في Firebase

  if (Firebase.RTDB.getBool(&fbdo, "/controls/pump")) {
```

```
    if (fbdo.boolData()) digitalWrite(PUMP_PIN, HIGH);
    else digitalWrite(PUMP_PIN, LOW);
  }
}

// 3. رفع البيانات إلى Firebase كل 5 ثوانٍ
if (millis() - sendDataPrevMillis > 5000) {
  sendDataPrevMillis = millis();

  FirebaseJson updateData;
  // تحديث البيانات في مجلد sensor_data ليتوافق مع تطبيق الفلتر
  updateData.set("sensor_data/temp", t);
  updateData.set("sensor_data/moisture", soilPercent);
  updateData.set("sensor_data/light", lightPercent);
  updateData.set("sensor_data/pump_state", digitalRead(PUMP_PIN) == HIGH);

  if (Firebase.RTDB.updateNode(&fbdo, "/", &updateData)) {
    Serial.println("Dashboard Updated!");
  } else {
    Serial.println(fbdo.errorReason());
  }
}
}
```

9. Methodology and Functional Summary

The methodology focuses on achieving a professional-grade balance between hardware protection and software precision. The **ESP32**'s internal 12-bit ADC provides 4096 levels of sensitivity, allowing the system to detect minute changes in soil moisture that 8-bit controllers (like ATmega32) would miss [1].

Crucially, the hardware design incorporates the **L298 driver** to solve the "Back-EMF" problem; since water pumps are inductive, they can generate massive reverse voltage spikes when turned off. The L298's internal flyback diodes safely dissipate this energy [2]. Furthermore, by monitoring the **DHT11**, the system accounts for "Atmospheric Demand"—higher temperatures lead to faster evaporation. In advanced versions of this methodology, the system can proactively irrigate even before the moisture hits the lower limit if a high-temperature trend is detected [4]. This holistic approach creates a robust, self-sustaining environment for agricultural crops [3].

10. References

[1] **Espressif Systems (2023).** *ESP32 Technical Reference Manual v4.1*. Detailed technical specifications of the Xtensa® Dual-Core architecture.

[2] **STMicroelectronics (2000).** *L298 Dual Full-Bridge Driver Datasheet*. Technical documentation on driving inductive loads and H-Bridge logic.

[3] **Fisher, D. K., & Gould, P. J. (2012).** "Open-source hardware is a low-cost alternative for scientific instrumentation." *Modern Instrumentation*.

[4] **Balaji, M. S., et al. (2020).** "IoT Based Smart Crop Monitoring and Irrigation System." *International Journal of Advanced Science and Technology*.

[5] **Patel, K., & Patel, S. M. (2016).** "Internet of Things-IOT: Definition, Characteristics, and Architecture." *International Journal of Engineering Science and Computing*.

[6] **Goyal, M. R. (2015).** *Management of Drip/Trickle or Micro Irrigation*. Apple Academic Press. (Technical Reference for Soil-Water dynamics).